T.O. 00-25-245

TECHNICAL MANUAL

OPERATIONS INSTRUCTIONS
TESTING AND INSPECTION
PROCEDURES FOR PERSONNEL
SAFETY AND RESCUE EQUIPMENT

F09603-81-C-0108
F09603-84-C-0322
(ATOS)

BASIC AND ALL CHANGES HAVE BEEN MERGED TO MAKE THIS A COMPLETE PUBLICATION

DISTRIBUTION STATEMENT - Approved for public release; distribution is unlimited. Other request for this document should be referred to WR-ALC/LKC, Robins AFB GA 31098. Questions concerning technical content should be referred to WR-ALC/LECF, Robins AFB GA 31098.

Published under authority of the Secretary of the Air Force

26 JANUARY 1971
CHANGE 16 - 11 APRIL 1997

INSERT LATEST CHANGED PAGES. DESTROY SUPERSEDED PAGES.

LIST OF EFFECTIVE PAGES

NOTE: The portion of the text affected by the changes is indicated by a vertical line in the outer margins of the page. Changes to illustrations are indicated by miniature pointing hands. Changes to wiring diagrams are indicated by shaded areas.

Dates of issue for original and changed pages are:

Original ..... 0.....26 January 1971
Change..... 1..... 20 July 1972
Change..... 2..... 9 July 1973
Change..... 3.....1 November 1973
Change..... 4.....15 March 1974
Change..... 5.....1 November 1975
Change..... 6..... 25 April 1977
Change..... 7..... 14 December 1979
Change..... 8.....25 September 1980
Change..... 9.....11 September 1981
Change..... 10.....28 January 1981
Change..... 11..... 2 December 1982
Change..... 12.....28 August 1986
Change..... 13..... 25 June 1987
Change..... 14.....6 January 1989
Change..... 15.....31 August 1993
Change..... 16..... 11 April 1997

TOTAL NUMBER OF PAGES IN THIS PUBLICATION IS 18, CONSISTING OF THE FOLLOWING:

Page No.	*Change No.	Page No.	*Change No.	Page No.	*Change No.
Title	**16**				
A	**16**				
i	15				
ii Blank	4				
1-1/ 2-1 - 2-2	12				
2-3	6				
2-4	13				
3-1 - 3-2	15				
3-2.1	13				
3-2.2 Blank	13				
3-3	14				
3-4 Blank	3				
4-1 - 4-2	**16**				
4-3 - 4-4	0				

*Zero in this column indicates an original page

TABLE OF CONTENTS

Section/Para		Page
LIST OF ILLUSTRATIONS		i
I GENERAL		1-1
1-1	Purpose	1-1
1-4	Responsibility	1-1
1-6	Scope	1-1
II PROCEDURE FOR SAFETY BELTS, STRAPS AND HARNESSES		1-1
2-1	General	1-1
2-5	Types of Inspection	2-2
2-7	Inspection	2-2
2-10	Marking and Disposition	2-3
2-13	Cleaning	2-4
III RESTRAINT ASSEMBLIES, SAFETY NETS, ESCAPE ROPES, LANYARDS AND LIFELINES.		3-1
3-1	General	3-1
3-3	Escape Ropes, Lanyards and Lifelines	3-1
3-6	Safety Nets	3-3
3-8	Restraint Assemblies	3-3
3-10	Shock Absorbers (FSN 4240 498 8032 and 8034)	3-3
IV RESCUE SEATS AND BASKETS		4-1
4-1	General	4-1
4-5	Testing MA-1 Rescue Basket (FSN 4240 329 7243, figure 4-1)	4-1
4-8	Testing Rescue Seat Forest Penetrator (FSN 4240 199 7353U, figure 4-2	4-1
4-11	Testing Boyd Helicopter Rescue Seats (FSN 4240 673 5679, figure 4-3	4-2

LIST OF ILLUSTRATIONS

Figure	Title	Page
2-1	Safety Strap	2-2
2-2	Safety Harness and Life Line	2-3
3-1	Restraint Kit Assembly	3-1
3-2	Shock Absorbers	3-2
3-3	Safety Net	3-2
4-1	MA-1 Rescue Basket	4-2
4-2	Forest Penetrator Rescue Seat	4-3
4-3	Boyd Rescue Seat	4-4

SECTION I

GENERAL

1-1. PURPOSE.

1-2. This technical order is to provide procedures and guidelines for periodic testing of personnel safety and rescue type equipment, for the most part found in FSG 4200. This includes industrial safety belts and straps, industrial type safety harnesses, restraint harness (ground use), safety nets and ropes, and rescue seats and baskets.

1-3. Procedures contained herein are considered mandatory and no deviation is permitted. Primary importance of this technical manual is to insure that safety and rescue equipment outlined herein is safe for accomplishment of tasks for which they were initially designed. Comments and recommendations for improvements to this manual will be submitted in accordance with T.O. 00-5-1.

1-4. RESPONSIBILITY.

1-5. Safety officers shall be responsible for monitoring to insure that safety and rescue equipment described herein is periodically tested as outlined. He shall assist in determining serviceability or rejection of equipment being tested or inspected. The supervisor responsible for safety/rescue equipment is responsible for insuring that the equipment described herein is periodically inspected or tested. All tests and inspections directed herein shall be accomplished at organizational/field level maintenance.

1-6. SCOPE.

1-7. The provisions of this technical order are applicable to all commands and separate operating agencies of the USAF, AF Reserve, and the Air National Guard.

SECTION II

PROCEDURES FOR SAFETY BELTS, STRAPS AND HARNESSES

2-1. GENERAL.

2-2. Industrial type safety belts, straps, harnesses, rescue slings, wrist harness, boatswain harness/chairs and miscellaneous belts harness etc., shall be utilized for their intended purpose only. During use, care should be exercised to prevent them from contact with moisture, hydraulic fluids, oil, grease, fuel, steam pipes or other like heat sources. In the event they become wet they shall be dried without the aid of artificial heat, i.e., at room temperature. In the event oils and lubricants come in contact with these they shall be wiped and cleaned as soon as possible to prevent saturation and absorbtion. Typical straps, and harnesses are shown in figures 2-1 and 2-2. (Industrial safety belts are not shown). While in service use the equipment described in this section shall be visually inspected by utilizing personnel as outlined in following paragraphs. Nylon belts shall not be used in areas where acid conditions exist. Polyester or polypropylene belts, harnesses, straps, etc., shall not be used where caustic conditions exist or in temperatures exceeding 180°F. Leather straps shall not be used in temperature above 150°F. Extra holes shall not be punched in this equipment.

2-3. STORAGE REQUIREMENTS. Safety belts, straps, and harnesses will be stored in their original shipping containers when possible in a cool dry place until they are issued or worn. When not in use they shall be stored in any well ventilated area supported on slats or hung in loose coils. Do not store in areas where they could be subjected to mechanical or chemical damage. Where possible storage of these items should be in a temperature range of 35 to 100 degrees fahrenheit and out of direct sunlight. The term "dry" is usually used to denote an area where condensation (moisture) does not come in contact with the containers or their contents. An example would be storing the packages in a building away from its wall and in pallets. Periodic examinations of the storage containers should be made more frequently when storage containers vary from

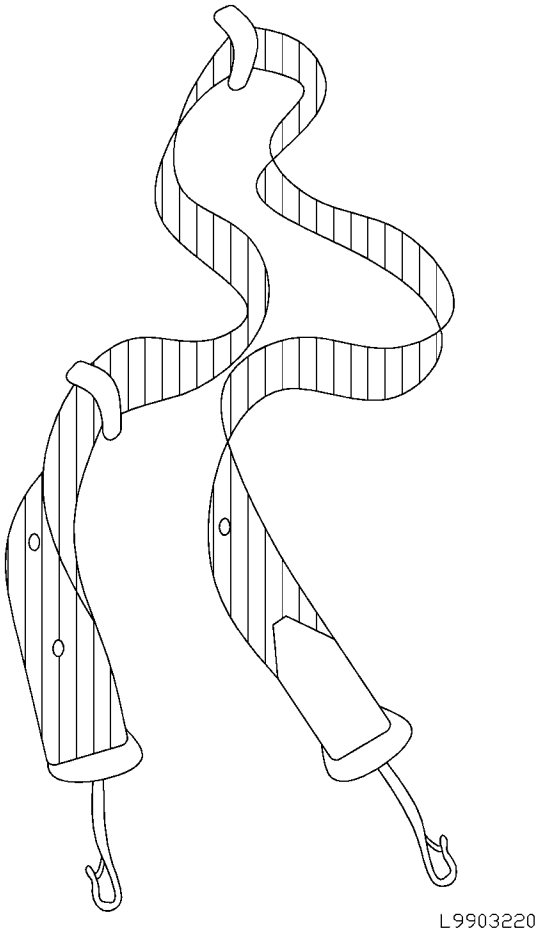

Figure 2-1. Safety Strap

the ideal. Therefore, if the belts, straps, and harnesses are stored properly and meet the inspection requirements outlined they can be considered safe for day-to-day use.

2-4. SHELF LIFE. There is no chronological service life for this equipment. User should rely on a visual inspection of condition on a daily basis and remove equipment from service when it shows excessive wear or deterioration.

2-5. TYPES OF INSPECTION.

2-6. Inspection of belts, straps, harnesses, etc., described in this section shall consist of the following types:

a. Initial Inspection. Before using new equipment, it shall be inspected to insure that proper equipment is being used for the function for which it was designed, possible manufacturers defects, and that it meets requirements of this handbook.

b. User Inspection. This inspection shall be made by the person handling or using this equipment each time it is used. This inspection is visual for obvious defects, general condition area.

c. Period Inspection, This inspection shall be conducted by personnel qualified in the use of this equipment, usually 7 or 9 level. Where possible this inspection will always be made by the same personnel. Frequency of inspection will be based on the following:

(1) Frequency of use.

(2) Severity of service conditions.

(3) Experience gained when used in similar circumstances.

NOTE

Periodic type inspection of industrial safety belts, harnesses, and straps (including lanyards), as defined in AFOSH Std, 127-31, shall not exceed six months. This inspection should coincide with the quarterly cleaning and semi-annual dressing requirements, if applicable.

2-7. INSPECTION.

2-8. Belts, straps, harnesses, lanyards, life lines, etc., constructed of nylon (impregnated with neoprene or equal) shall be inspected for the following defects, any one of which shall be cause for rejection of the piece of equipment being inspected.

a. Delamination of plies.

b. Missing, loose, broken, or destorted parts (except miscellaneous parts such as tape thongs, plier pouches, etc.).

c. Abrasion marks resulting in rupture exceeding ten percent of width or one inch in length.

d. Any hole, cut, or tear.

e. Frayed edges or smashes.

f. Spots, stains, or streaks exceeding 12 inches.

g. Broken, worn, loose or missing rivets or stitching.

h. Broken, cracked, or deformed D rings, snaphooks, plates, and buckles.

i. Snap hook keeper latch, bent, broken, or missing.

j. Surface corrosion of metal parts. (Reject only when pitted).

k. Acid or caustic burns.

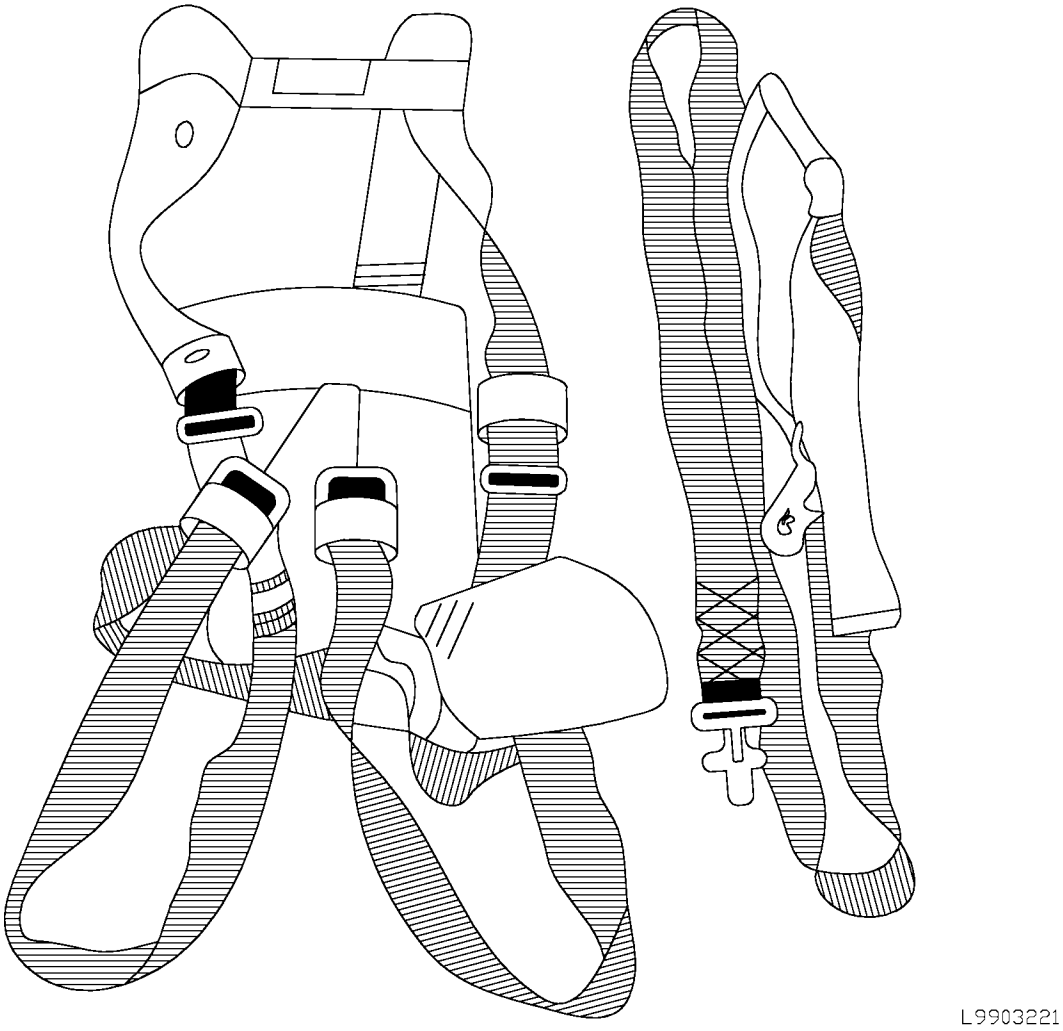

Figure 2-2. Safety Harness and Life Line

l. Melting or charring of any part of surface.

m. Slippage of webbing thru buckles and adjusters.

NOTE

Fraying, cuts, abrassions, etc., of the body pad portion of the belt, which is a non stress or non supporting area, are not considered critical. Any of cited defects which are directly related to the waist belt portion of the belt, which is supporting and subject to stress, are considered critical and rejection shall be accordingly.

2-9. Belts, straps, harnesses, and life lines constructed of leather shall be inspected for the following defects, any one of which is cause for rejection of the piece of equipment being inspected.

a. Deep cuts and/or deep open scratches and cracks.

b. Damaged grain.

c. Loose or missing rivets or stitching.

d. Open grub holes.

e. Burnt leather.

f. Defects indicated in paragraph 2-8.h. thru m.

2-10. MARKING AND DISPOSITION.

2-11. Periodic inspection due dates will be affixed crossways on free ends of belts, harnesses, straps, etc., using black or white stencil ink, Federal

Specification TT-I-559 or equal. Black ink shall be used except where equipment is dark resulting in poor legibility. A protective coating of clear lacquer, or lacquer acrylic, shall be applied over the date to protect it from wear. Dates shall be recorded in chronological order. This abbreviation "Insp" followed by the word "due"and the date will be marked to indicate the date next inspection is due. Example: INSP due JAN 1971. Each subsequent inspection due date will appear below preceding date.

NOTE

On the above mentioned items, a tag stamped with inspection date as outlined in paragraph 2-11 may be attached. Attach the tag by means of a lanyard, insuring that tag does not impair operation of item. Commands may develop and direct a locally maintained Form or Log to document inspections where desired.

2-12. Belts, harnesses, straps, etc., found to be unserviceable as result of inspection will be tagged as condition condemned property. To prevent reuse they shall be rendered useless by cutting across webbing or straps.

2-13. CLEANING.

2-14. Leather belts, harnesses, straps, etc., will be cleaned approximately every three months and dressed approximately every six months while in service use. If leather units that are initially issued are found to be hard and dry they shall be inspected for serviceability and dressed before use.

a. Wipe off all surface dirt with a sponge dampened (not wet) with water.

b. Rinse out sponge (or rag) in clear water and squeeze until practically dry. Then with aid of neutral soap (free front alkali) such as castile or white toilet strap work up a thick lather and throughly wash the entire article to remove embedded dirt and perspiration and then wipe with clean cloth to remove all moisture. Using a good grade of saddle soap repeat above for leather items and allow to dry at room temperature.

c. To apply dressing do not allow to dry. While leather is still damp, use for each article about one-quarter ounce (two teaspoons) of neatsfoot oil and apply the oil gradually with a wool rag using light strokes to work it into the leather. After oiling, the article should be set aside in a dry, cool place for about 24 hours in order to permit the leather to dry slightly and then wipe with a soft cloth to remove excess oil.

NOTE

Oil applied to dry or dirty leather has a harmful affect on leather. Clean as outlined before oiling and use only neatsfoot oil.

d. Nylon articles may be cleaned by the same method as outlined for leather only no dressing is required either with saddle soap or neatsfoot oil.

SECTION III

RESTRAINT ASSEMBLIES, SAFETY NETS, ESCAPE ROPES, LANYARDS AND LIFELINES.

3-1. GENERAL

3-2. Restraint assemblies, safety nets, escape ropes, lanyards, lifelines, and their components shall be used for their intended purpose only. The general requirements concerning storage data, daily use, shelf life and inspection requirements are the same for these items as for belts, straps, and harnessess; they shall be periodically inspected every six months, and the inspection dates will be recorded on a tag affixed to the free end of each rope. (Restraint assemblies, shock absorbers, and safety nets are shown in figures 3-1, 3-2 and 3-3). In addition fiber ropes should be stored in areas where not subjected to mechanical or chemical damage, extreme temperature (below 20°F, above 180°F), excessive moisture (over 80% relative humidity) and excessive dryness (under 10% relative humidity).

CAUTION

Any lifeline, escape rope or lanyard actually subjected to in service loading, exceeding that of the rated static load testing, shall be immediately removed from service and shall not be used again for personnel safe guarding.

NOTE

Escape ropes used on aircraft are excluded from the 6 month inspection and 5 year shelf-life. See applicable aircraft technical order for specific instructions.

3-3. ESCAPE ROPES, LANYARDS AND LIFELINES.

NOTE

For those escape ropes which are locally fabricated, assure date of manufacture is obtained from the bulk roll from which the subject rope is taken. This date will be attached as directed in paragraph 3-2 and will be considered the date of the initial periodic 6 months inspecton.

3-4. Escape ropes, lanyards and lifelines shall be inspected every six months or any time their condition is considered questionable. Inspect rope assemblies for the following defects, any one of which is basis for rejection.

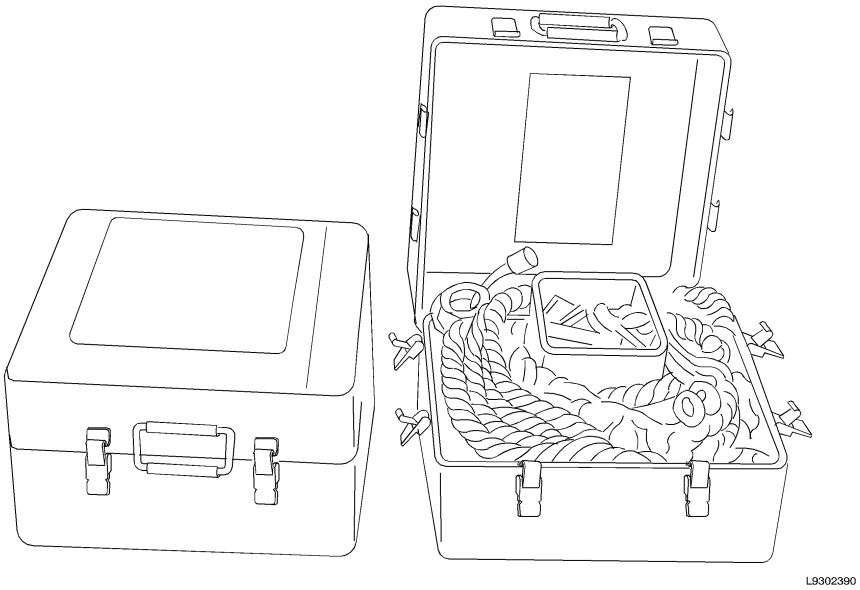

Figure 3-1. Restraint Kit Assembly

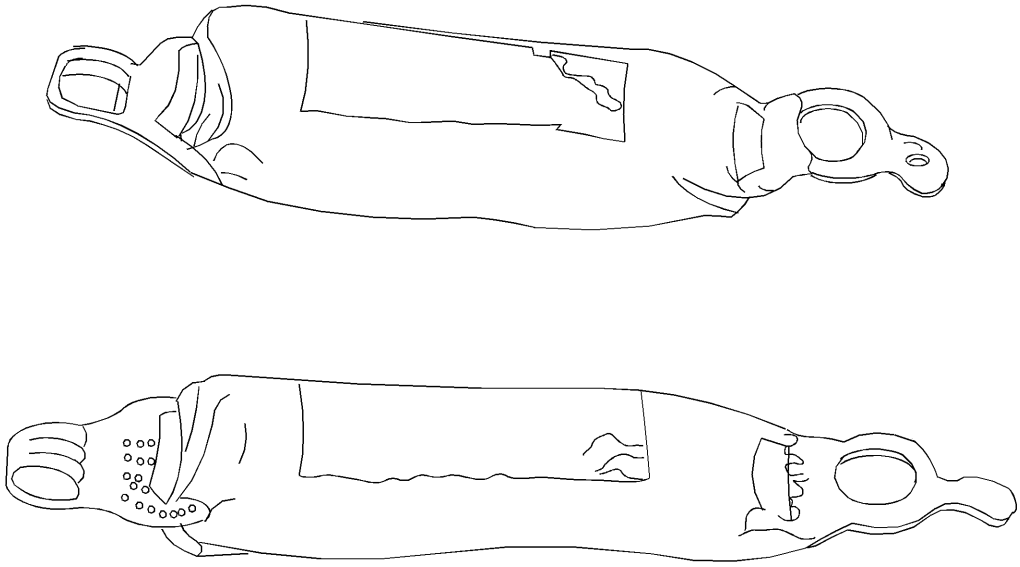

L9302391

Figure 3-2. Shock Absorbers

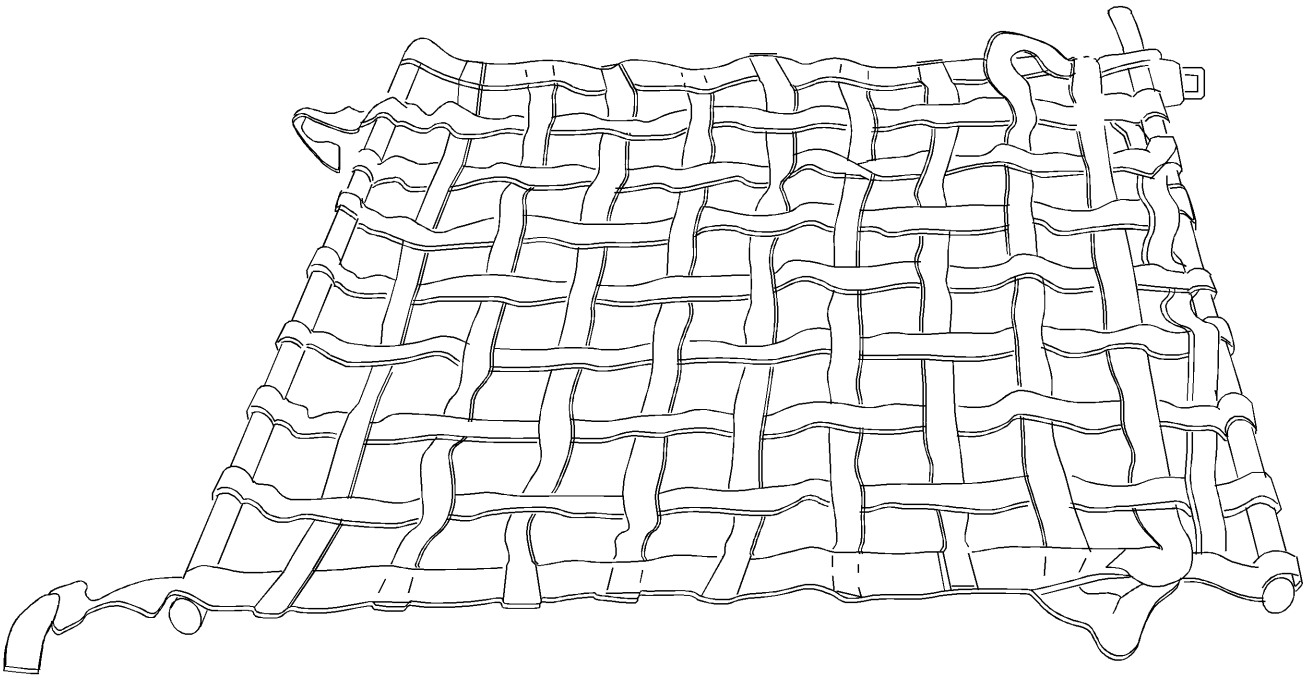

L9302392

Figure 3-3. Safety Net

NOTE

Escape ropes used on aircraft are excluded from the 6 month inspection and 5 year shelf-life. See applicable aircraft technical order for specific instructions.

a. Any cut, chafe, or nicks.

b. Bulged strands.

c. Knots in individual strands.

d. End fittings not properly attached (served, spliced, wrapped, etc.).

e. Abnormal weakness detected visually.

f. Powdered fibers between strands.

g. Variation in size or roundness of strands.

h. Discoloration or rotting.

i. Broken, bent, or deformed fittings.

j. Surface corrosion on end fittings (reject only when pitted).

CAUTION

Fiber ropes shall not be used for support of humans around welding, burning, or other heat producing sources.

3-5. Block assembly, single sheave (FSN 3940-803-9546), used in missile silos contains many rope or polypropylene rope (FSN 4020-874-7921). Inspect the rope as outlined in paragraph 3-4. Inspect the sheave for pully movement, deformity, cracks, missing components, and surface corrosion. (Reject if pitted.)

3-6. SAFETY NETS.

3-7. The general requirements, types of inspection, storage data, and shelf life for safety nets are the same as for belts, straps, and harnesses. Since most all safety nets are constructed of ropes, cords, webbing, snaps, etc., inspection procedures and defects for rejection are basically the same. Therefore all types of safety nets (as found in FSC 4240) shall be inspected as indicated. Inspect the net and shock mechanism for the following defects any one of which is basis for rejection.

a. Damaged or parted ropes or webs.

b. Parted segments.

c. Snaps and D rings for physical damage (broken, cracked, deformed, or keeper latch missing).

d. Surface corrosion (reject only when pitted).

e. By touch and visually inspect all butyle rubber for swelling, discoloration, lamination separation, tears, cracking, or any other abnormalities.

f. Straps and ropes an previously outlined.

3-8. RESTRAINT ASSEMBLIES.

3-9. Restraint assemblies outlined herein pertain to those assemblies used by ground personnel working on horizontal stabilizers, wings, fuselage, and empennage of C-133, C-141, and C-5 aircraft. The storage data, shelf life, types of inspection, and general requirements for these items are the same as for belts, straps, ropes, and harnesses. Shock absorbers utilized with this type of equipment are covered separately in subsequent paragraphs. Restraint assemblies described herein shall be periodically inspected every six months. Except where indicated any one defect is basis for rejection. Inspect for following:

a. Abnormal deflection of rope assembly. (Also see rope inspections.)

b. Parted segments of rope assembly.

c. Broken, cut, or chafed ropes.

d. Mildew, fungus, or mold on rope assembly.

e. Deformed, cracked, or permanent set in the anchoring eyes.

f. Surface corrosion (reject only when deeply pitted).

g. Inspect harnesses per procedures for belts, straps, and harnesses.

h. Bolt assemblies for deformity, cracks, or permanent set.

i. For C-5 restraint assembly also see T.O. 13A1-5-1.

3-10. SHOCK ABSORBERS.

3-11. Generally the storage and general requirements for shock absorbers are the same as those outlined for belts, straps, and harnesses. Personnel utilizing these absorbers will note any unusual signs of wear during inspections prior to and after use. When signs of wear are evident or at a minimum of every two years, shock absorbers shall be inspected for defects as outlined for snaps, D rings, nylon, belts, straps, and harnesses. In addition they shall be inspected for separation of nylon filaments from straps. Separation is basis for rejection. Shock absorbers do not lend themselves to non-destructive tests. Energy is absorbed by the breaking of nylon filaments which bind the nylon strap and any pull test would render them unserviceable. If they are properly stored and visually inspected every 6 months, they can be considered safe for day to day use. Minor holes, cuts, tears, or loose stitchings in the protective covering of the shock absorber are not causes for rejection provided the nylon strap and its filament are not affected. Such defects should be covered with tape to prevent contamination of nylon filaments.

SECTION IV

RESCUE SEATS AND BASKETS

4-1. GENERAL.

4-2. When this equipment is used in salt water it shall be flushed as soon as possible after use with fresh water and all parts throughly dried. The MA-1 basket described herein is highly susceptable to corrosion and particular care should be given to this item after use in salt water. Personnel responsible for this equipment shall frequently visually inspect these assemblies for signs of wear and corrosion during use. When these signs are in evidence, rescue seats and baskets outlined shall be given non- destructive tests before further use as outlined herein. They shall also be given periodic tests as indicated for each item cited. There is no service life for items contained in this section. Condition only is basis for condemnation.

4-3. STORAGE REQUIREMENTS. Rescue seats and baskets shall be stored in their shipping containers in a cool dry place until placed in service. While in a day to day use they shall be stored or stowed in such a manner so that they will not be subjected to the elements.

4-4. SHELF LIFE. When rescue seats and baskets described herein have been properly stored, maintained, and pass the non-destructive tests, outlined, they can be be considered safe for day to day to use for an indefinite period of time. If at any time there is any doubt of serviceability they shall be replaced.

4-5. TESTING MA-1 RESCUE BASKET (FSN 4240 329 7243, figure 4-1).

NOTE

Organizations using Rescue Basket No. 490 shall perform maintenance, inspection and testing in accordance with manufacturers recommendations. POC is Lifesaving Systems Corporation, phone (813)645-2748.

4-6. To test the MA-1 basket suspend a load of 600 pounds in the basket for a minimum of ten seconds. The method is optional provided unit is suspended from attachment point of basket. Remove load and then remove flotation bags from each side of basket, inflate firmly and submerge in water for three minutes. Inspect basket for following defects.

a. Change in physical structure, i.e., broken, bent, deformed, or fractured parts. Reject if found.

b. Corrosion (reject only if deeply pitted). Aluminum may be treated as outlined in T.O. 12S6-3-1, in paragraph 11.

c. Floatation bag leakage. Small holes can be patched. Bags with excessive leakage shall be replaced.

4-7. The above test and inspection shall be accomplished on all MA-1 rescue basket in service use every three months.

4-8. TESTING RESCUE SEAT FOREST PENETRATOR (FSN 4240 199 7353BU, figure 4-2).

4-9. The rescue seat shall be subjected to the following non-destructive test every 12 months while in service use.

a. Strength: The Forest Penetrator Rescue seat shall be mounted to simulate rescue operation, using a helicopter rescue hoist hook attached to hoist rung of seat. A static load of 1800 pounds distributed equally on each seat (600 pounds on each seat) shall be applied for a minimum of 10 seconds. The method of applying the static load is optional.

b. SAFETY STRAPS. Remove the straps from the cover and unsnap the snap end of each strap from the attachment bolt. Inspect straps and components for defects as outlined in Section II. Clean as outlined.

c. Floatability. Install the flotation collar on the seat and place in fresh water deep enough to support the seat. The seat shall float.

4-10. INSPECTION. Inspect the seat after performing above test for following defects:

a. Damaged parts (broken, bent, deformed or fractured). Bent seats, broken springs, bent bolts, etc., can be replaced with new parts. If main body of assembly is damaged, condemn complete assembly without replacement of parts.

b. Missing parts. If unit passes tests, replace missing parts where possible. (Consult T.O. 14S6-3-1).

c. Floatation Collar. If flotation collar fails to float unit it shall be condemned and new unit installed.

d. Seats and hooks for freedom of movement to all positions, and proper latching and unlatching. If

unable to correct with replacement parts condemn assembly.

e. Corrosion. If corrosion is detected, treat in accordance with T.O. 1-1-691.

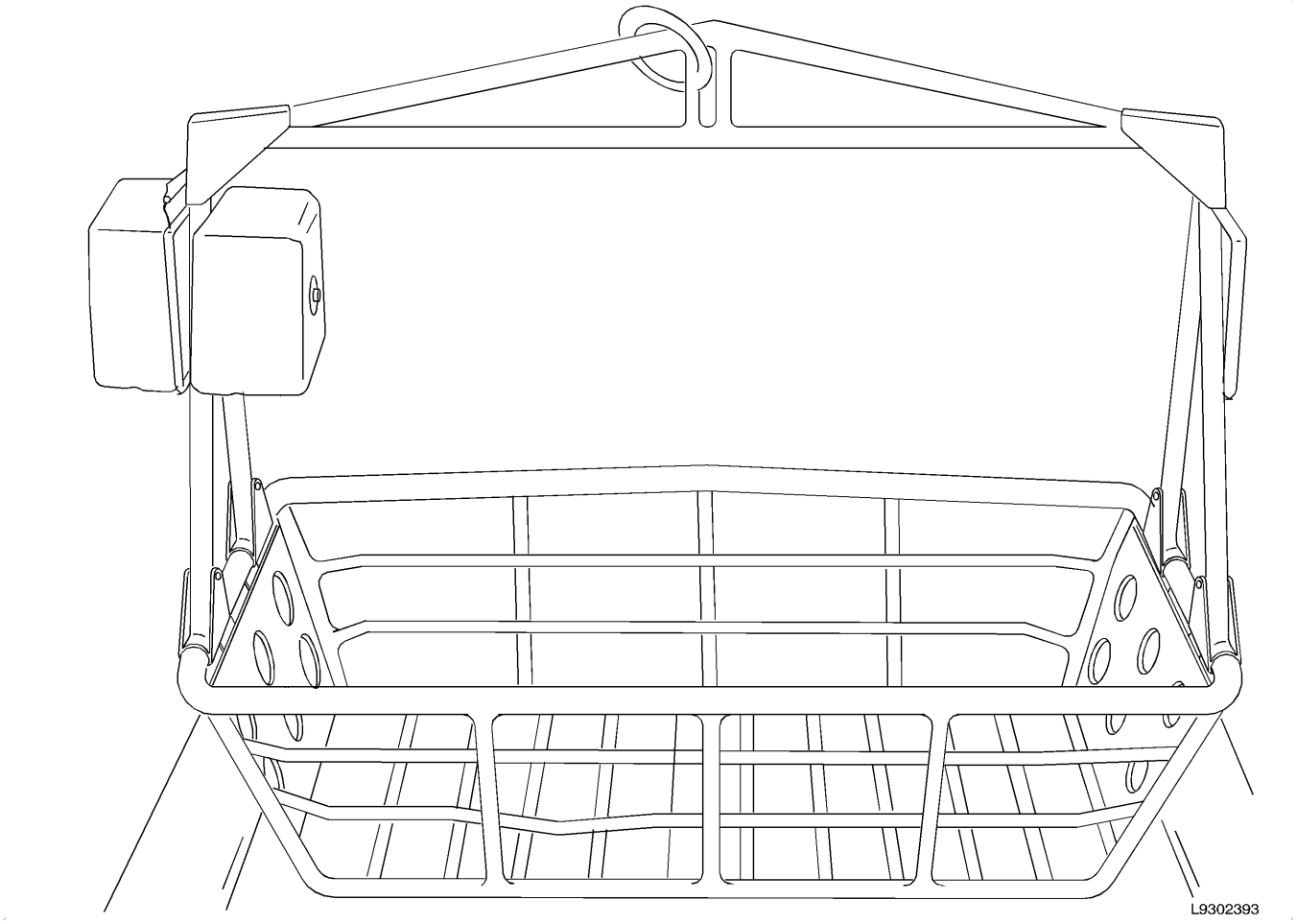

Figure 4-1. MA-1 Rescue Basket

4-11. TESTING BOYD HELICOPTER RESCUE SEATS (FSN 4240 673 5679, figure 4-3).

4-12. The rescue seat shall be subjected to the following non-destructive test every twelve months.

a. Strength. The Boyd rescue seat shall be mounted to simulate rescue operation, using a helicopter rescue hook inserted through the hoist ring of the seat. The helicopter seat shall support a 600 pound load for a period of ten seconds. The load may be applied by means of hydraulic or pneumatic presses, jacks, shot bags, or equivalent high density material on the seats. The load shall be equally distributed to the three blades.

b. Leakage and Floatability. The seat shall be placed in fresh water at room temperature and shall float. It shall then be completely submerged for a period of 15 minutes. There shall be no leakage of water into the flotation chamber and tube.

4-13. After performing above tests inspect the Boyd seat for the following defects:

a. Damaged parts (broken, bent, deformed or fractured). Condemn if any one condition is noted.

b. Missing parts such as snap hooks, rings keepers, etc. Replace if practical, otherwise condemn.

c. Leakage in flotation chamber which is evidence by water trapped in chamber. Condemn if leaks found; also condemn if seat does not float during float test.

d. Corrosion. Surface corrosion can be treated in accordance with T.O. 14S6-3-1. If deeply pitted, condemn.

e. Inspect straps per procedures outlined for belts, straps, and harnesses.

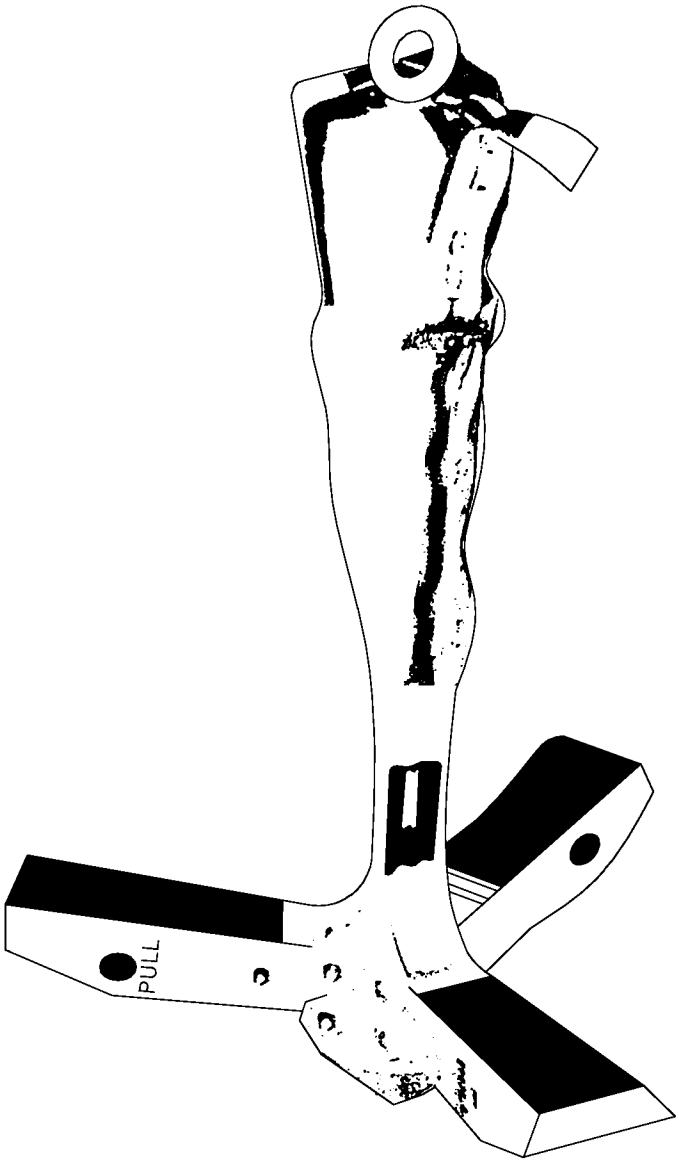

L9903222

Figure 4-2. Forest Penetrator Rescue Seat

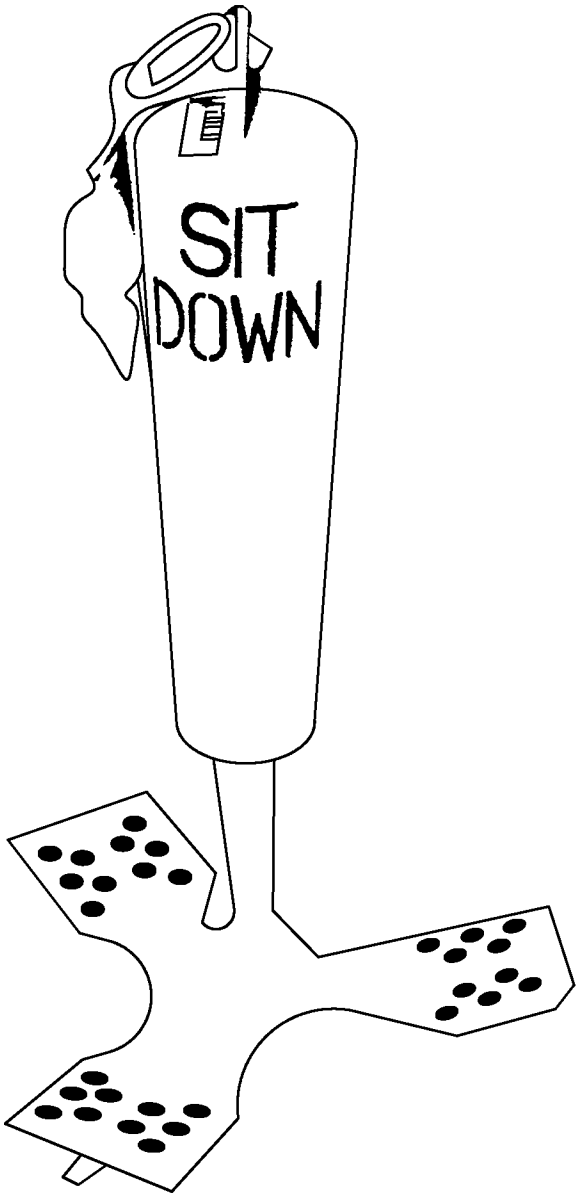

L9903223

Figure 4-3. Boyd Rescue Seat